Wireless Charging Coil Assembly-MQQRC060630S8R0

Rx Coil
Operating Temp. : -25℃~+85℃

Linear LTC4126

FEATURES

- Low profile
- High mechanical intensity

APPLICATIONS

- Using for transmitter and receiver module of portable electronic device such as mobile phones, tablet PC and DSCs, etc.

PRODUCT IDENTIFICATION

MQ	Q	R	C	060630	S	8R0
①	②	③	④	⑤	⑥	⑦

①	Product
MQ	Wireless Charging Coil Assembly

②	Type
Q	Induction (Close)
P	Induction (sparse)

③	Location
T	Transmitter
R	Receiver

④	Shape
C	Circle
R	Rectangle

⑤	External Dimensions
060630	(L×W×H) 6×6×3mm

⑥	Ferrite Feature type
S	Thin sheet
T	Central boss

⑦	Inductance
8R0	8.0uH

SHAPE AND DIMENSIONS

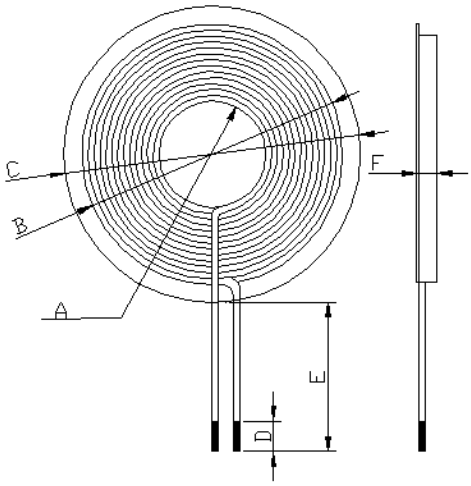

Unit: mm

ITEM	A	B	C	D	E	F
SPEC.	3.0±0.5	5.5±0.5	6±0.5	5±2	25±2	3.3max

Sunlord Industrial Park, Dafuyuan Industrial Zone, Guanlan, Shenzhen, China 518110 **Tel**: 0086-755-29832660 **Fax**: 0086-755-82269029 **E-Mail**: sunlord@sunlordinc.com

Winding specification

Coil Number	Wire	Turns
1	0.2	43

SPECIFICATION

Part Number	Old Part Number	Inductance	DC Resistance	Q
Test condition		100kHz	20±10℃	100KHz/1V
Units		uH	mΩ	/
MQQRC060630S8R0	/	8.0μH±10%	370mΩ ±20%	8 Min

CUSTOMIZED PRODUCT PRESENTATION

We can customize wireless charging coil according to Qi standard or your requirements. Please refer to the following feature ranges:

Inductance Range	DC Resistance Range	Dimensions Range	Thickness Range
uH	m	mm	mm
1-100	10-1000	6-200	0.2-10

Sunlord Industrial Park, Dafuyuan Industrial Zone, Guanlan, Shenzhen, China 518110 **Tel**: 0086-755-29832660 **Fax**: 0086-755-82269029 **E-Mail**: sunlord@sunlordinc.com